深圳市九鼎创展科技有限公司

Schematic

项目名称	部件名称	版本说明	制订日期
x210ii	核心板	V1.2	2011-06-26

设计： lqm

说明

修改记录

Title <Title>		
Size A3	Document Number <Doc>	Rev <RevCode>
Date: Saturday, April 07, 2012	Sheet 1 of 9	

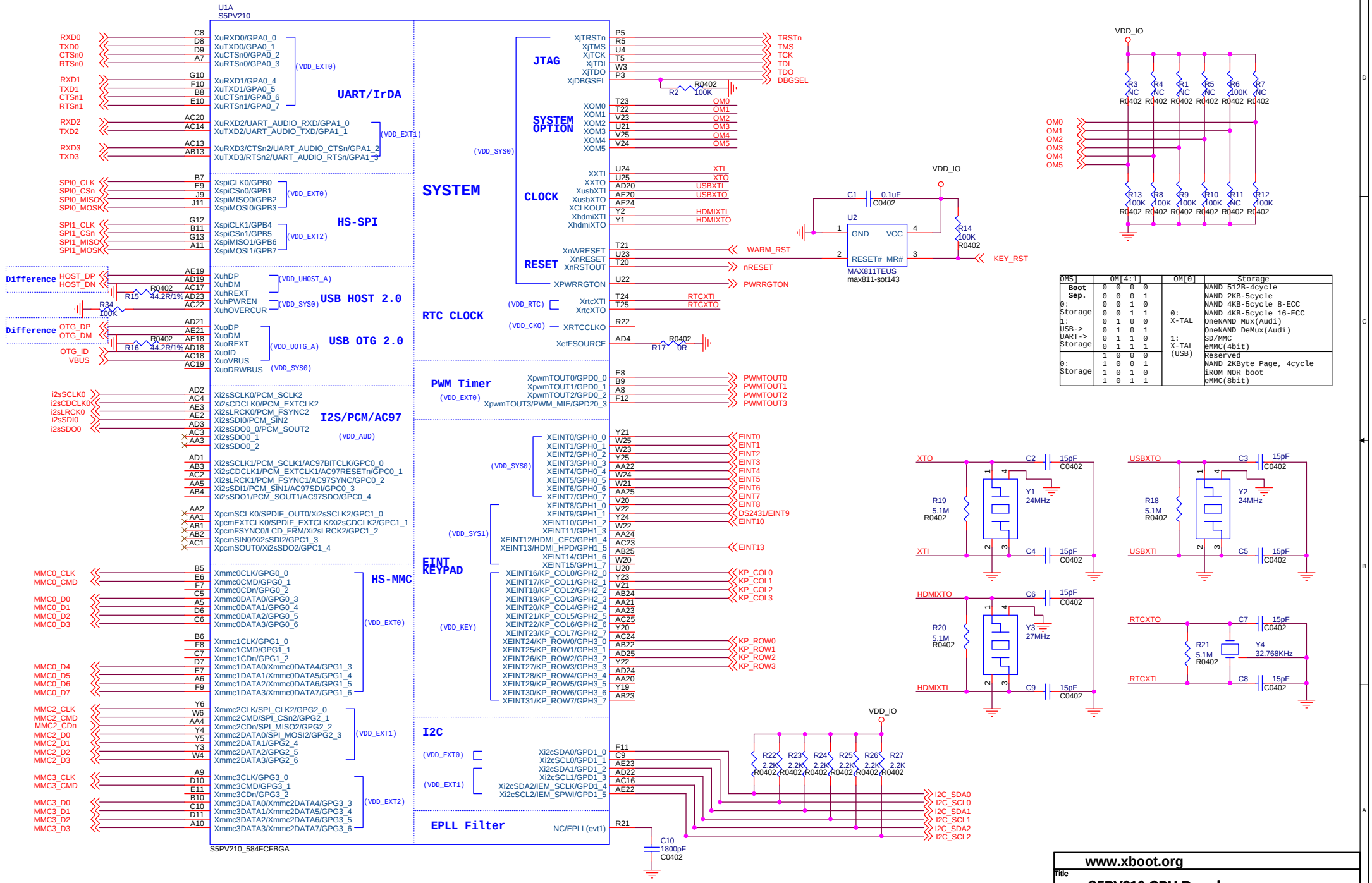

OM5]	OM[4:1]	OM[0]	Storage
Boot Sep.	0 0 0 0	0: X-TAL	NAND 512B-4cycle
	0 0 0 1		NAND 2KB-5cycle
0: Storage	0 0 1 0		NAND 4KB-5cycle 8-ECC
	0 0 1 1		NAND 4KB-5cycle 16-ECC
1: USB-> UART-> Storage	0 1 0 0		OneNAND Mux(Audi)
	0 1 0 1		OneNAND DeMux(Audi)
	0 1 1 0		SD/MMC
	0 1 1 1		eMMC(4bit)
	1 0 0 0	1: X-TAL (USB)	Reserved
0: Storage	1 0 0 1		NAND 2KByte Page, 4cycle
	1 0 1 0		iROM NOR boot
	1 0 1 1		eMMC(8bit)

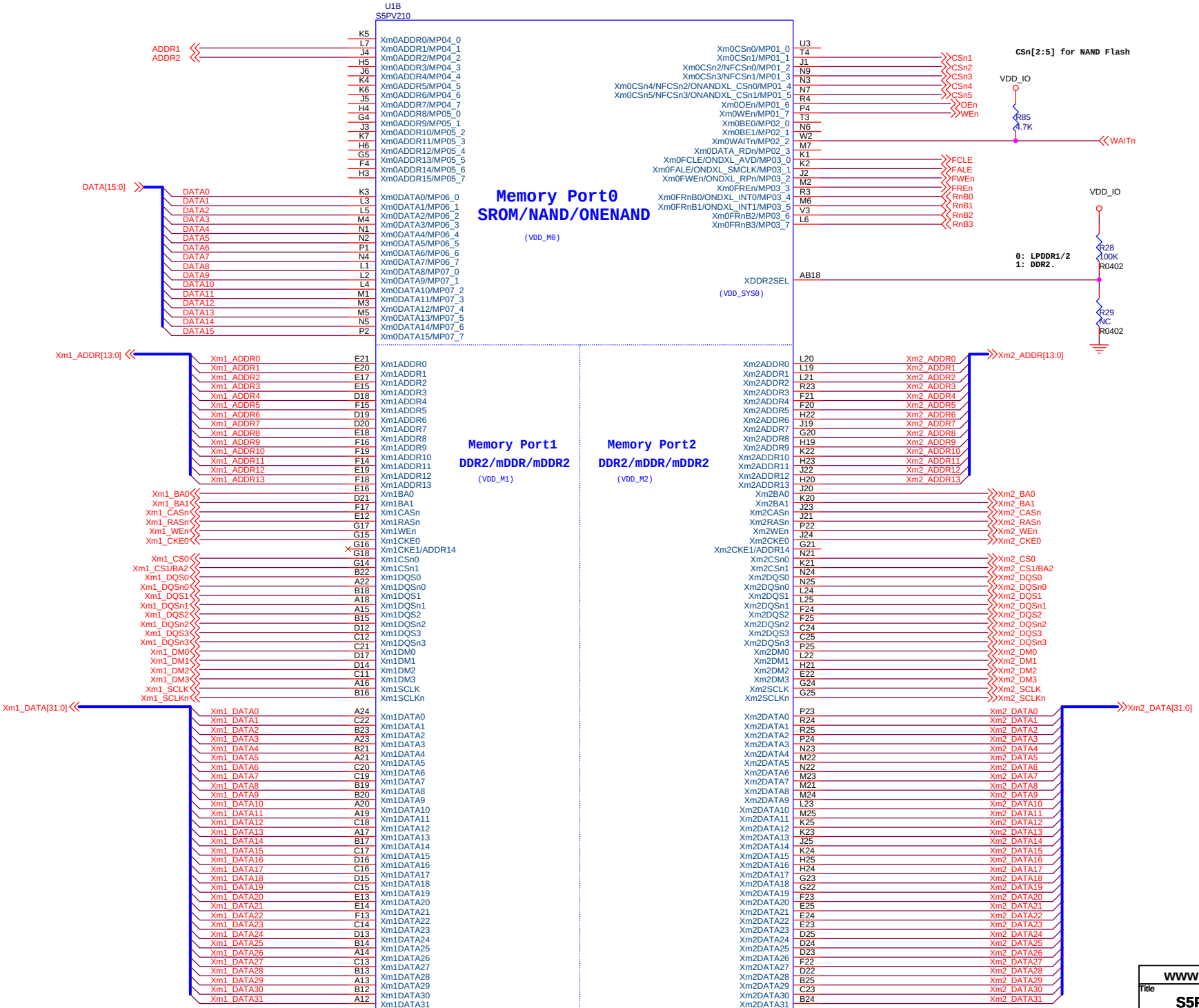

www.xboot.org

Title

S5PV210 CPU Board

Size	Document Number	Rev
A3	CPU_MEMORY	V1

Date: Saturday, April 07, 2012 Sheet 3 of 9

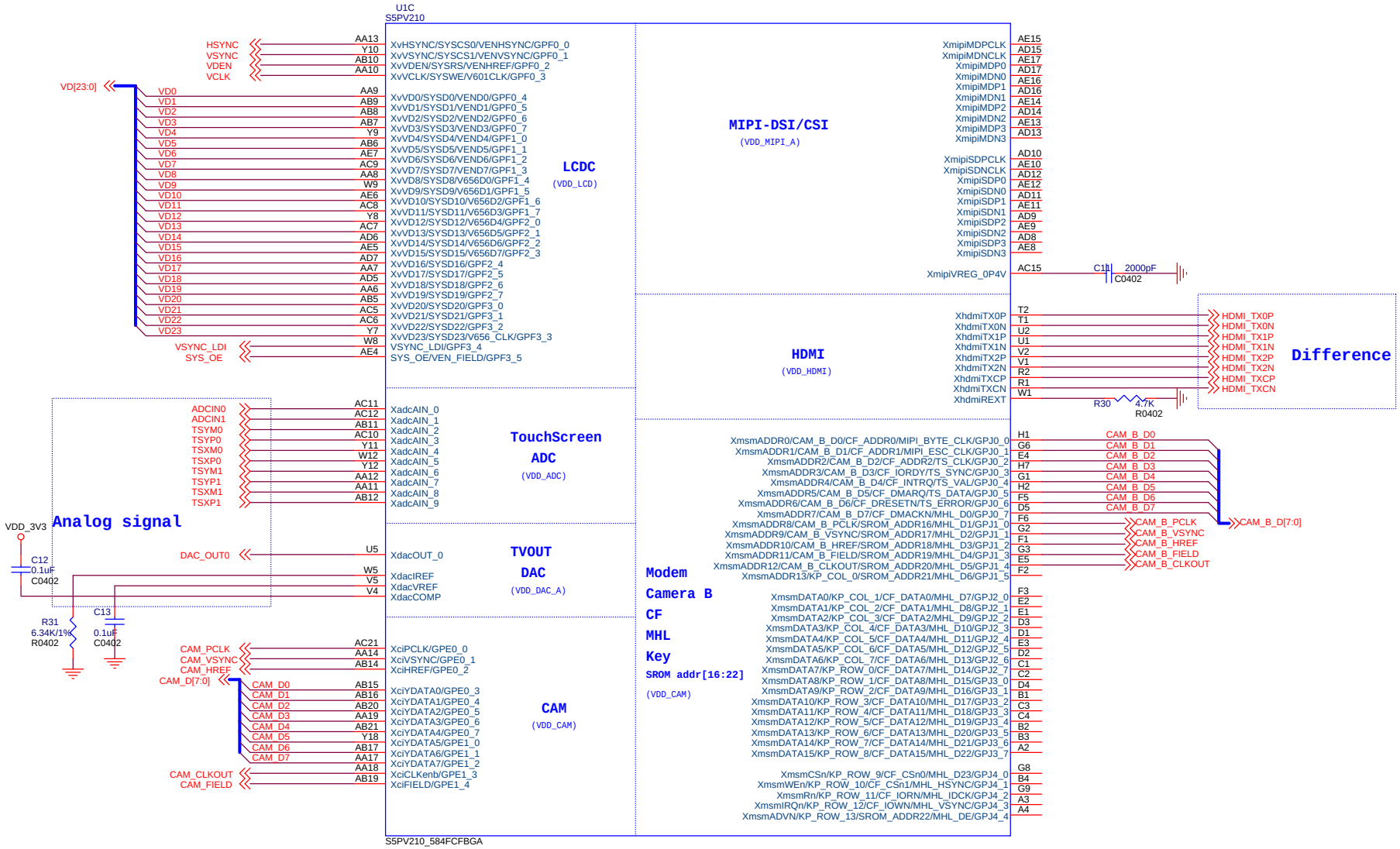

www.xboot.org

Title
S5PV210 CPU Board

Size	Document Number	Rev
A3	CPU_VIDEO	V1

Date: Saturday, April 07, 2012 Sheet 4 of 9

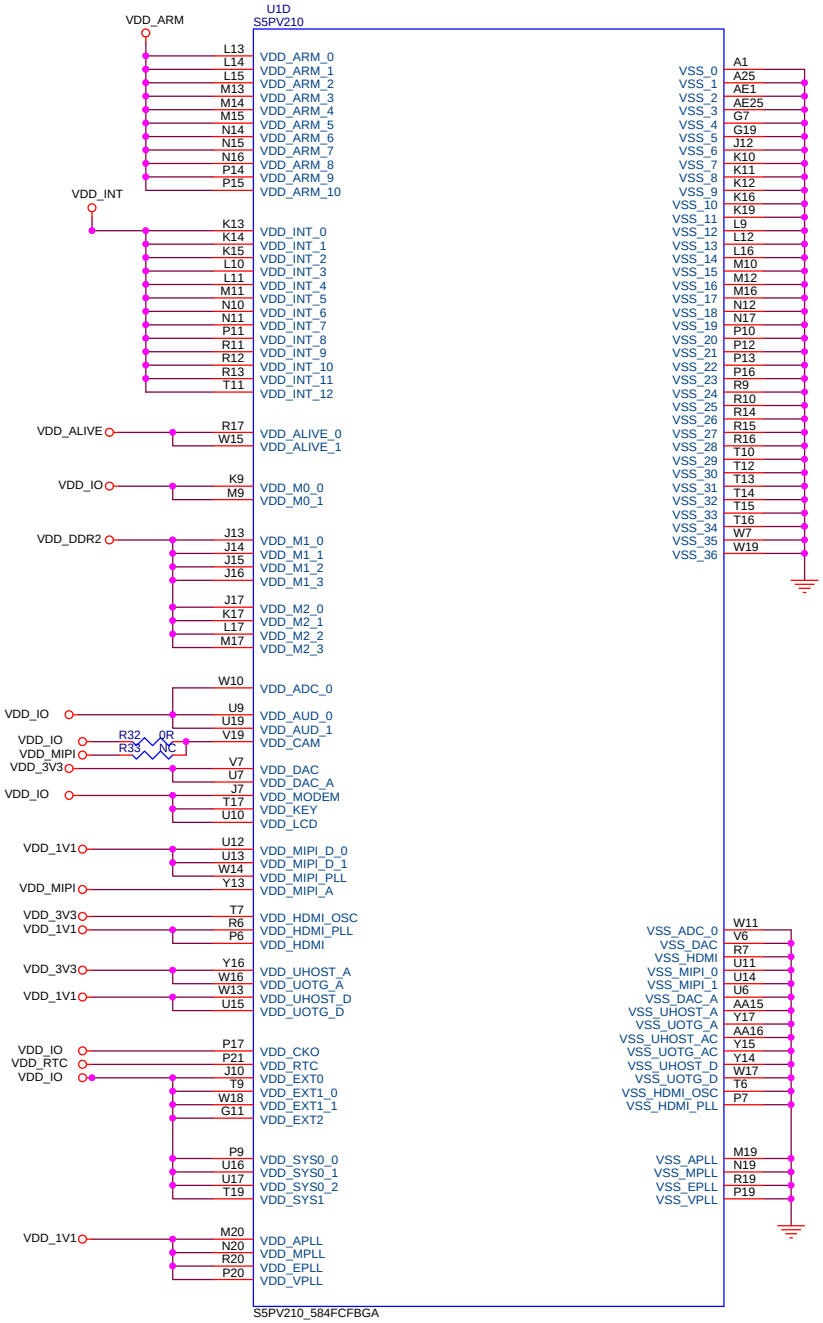

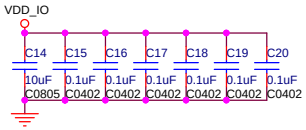

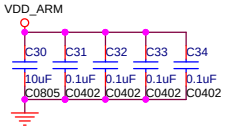

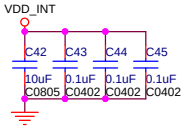

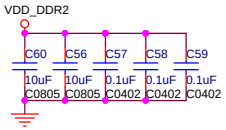

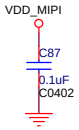

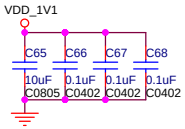

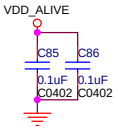

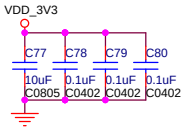

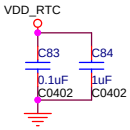

www.xboot.org

Title
S5PV210 CPU Board

Size	Document Number	Rev
A3	CPU_PWR	V1

Date: Saturday, April 07, 2012 Sheet 5 of 9

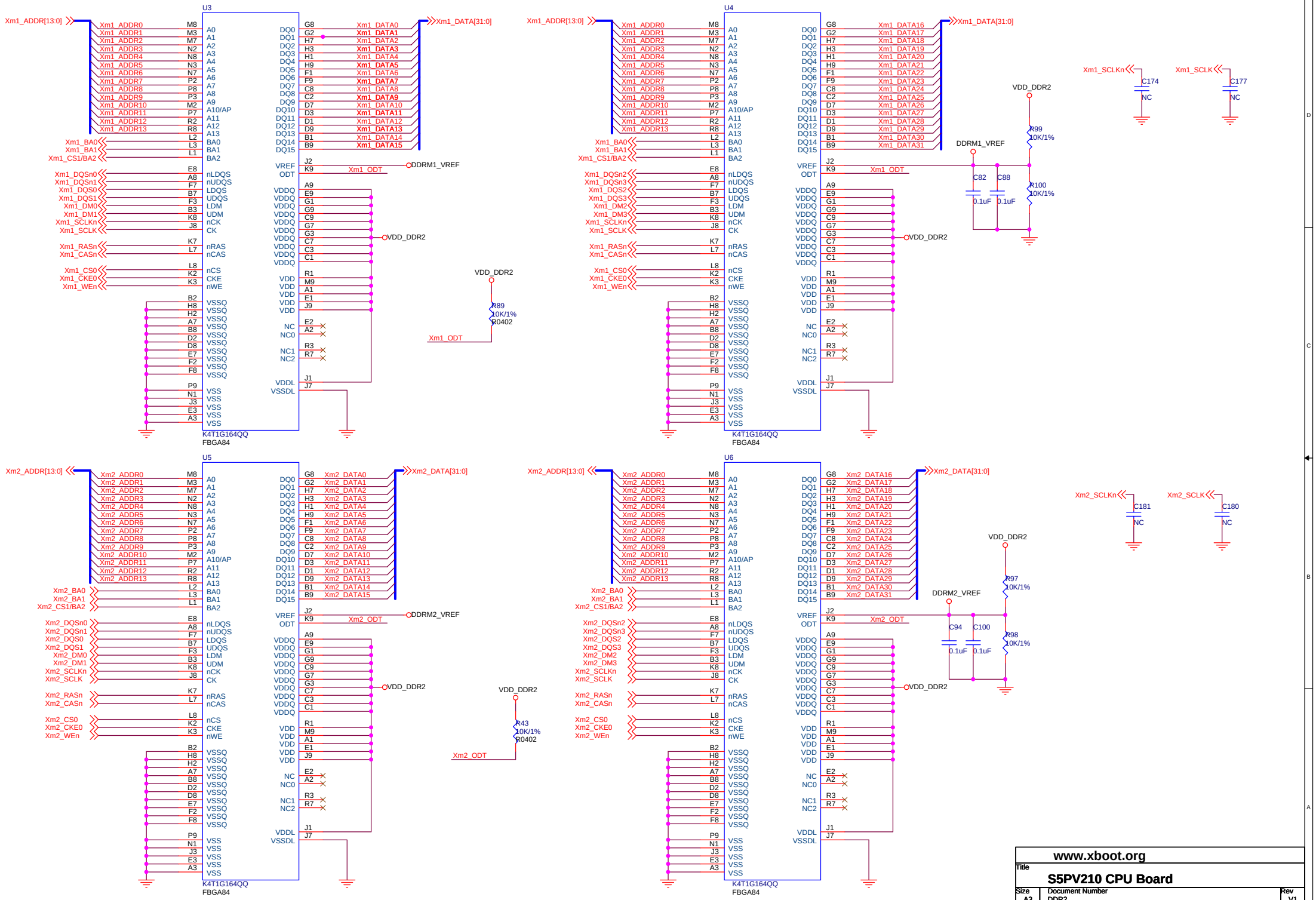

www.xboot.org

Title		
S5PV210 CPU Board		
Size A3	Document Number DDR2	Rev V1
Date: Saturday, April 07, 2012	Sheet 6 of 9	

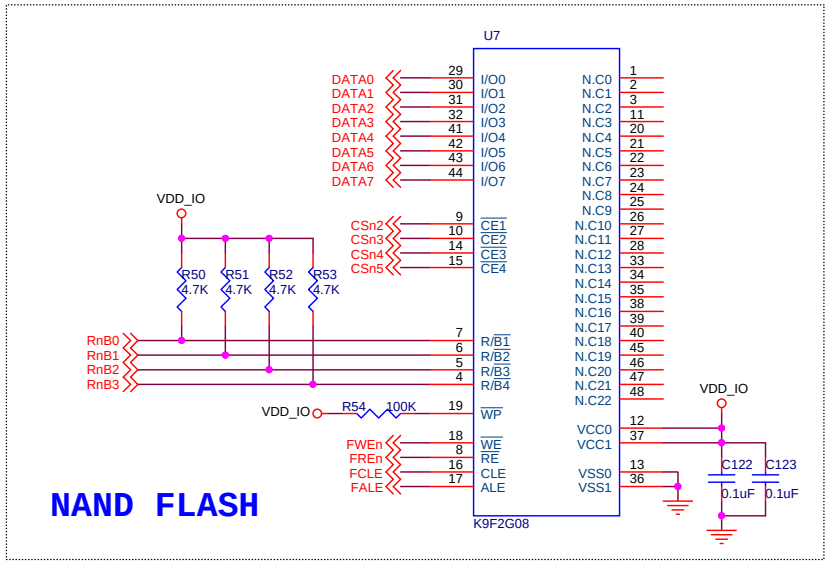

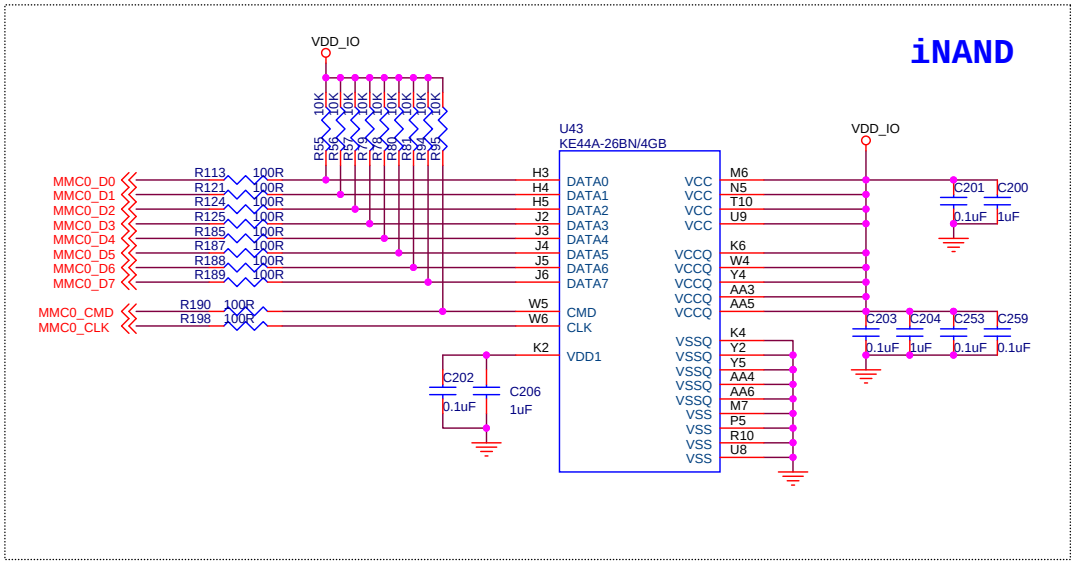

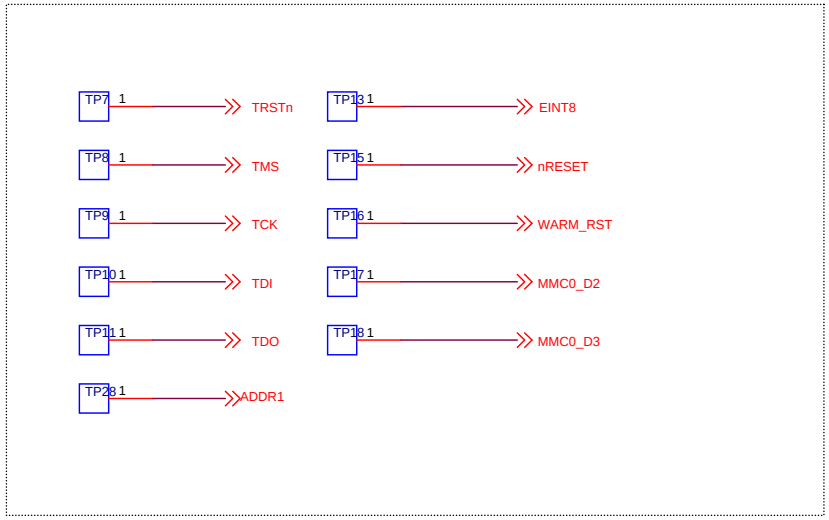

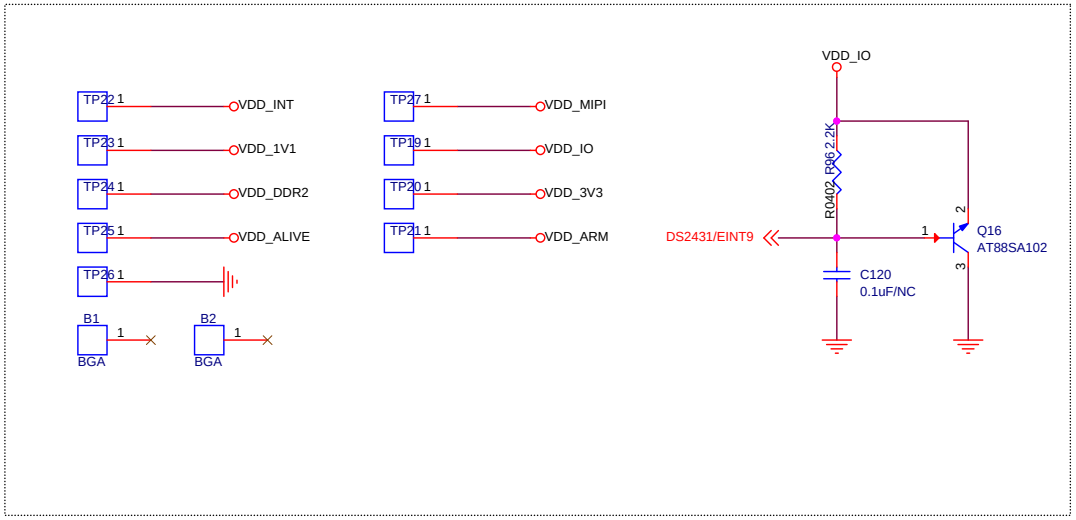

www.xboot.org

Title: S5PV210 CPU Board

Size	Document Number	Rev
B	NAND	V1

Date: Saturday, April 07, 2012 Sheet 7 of 9

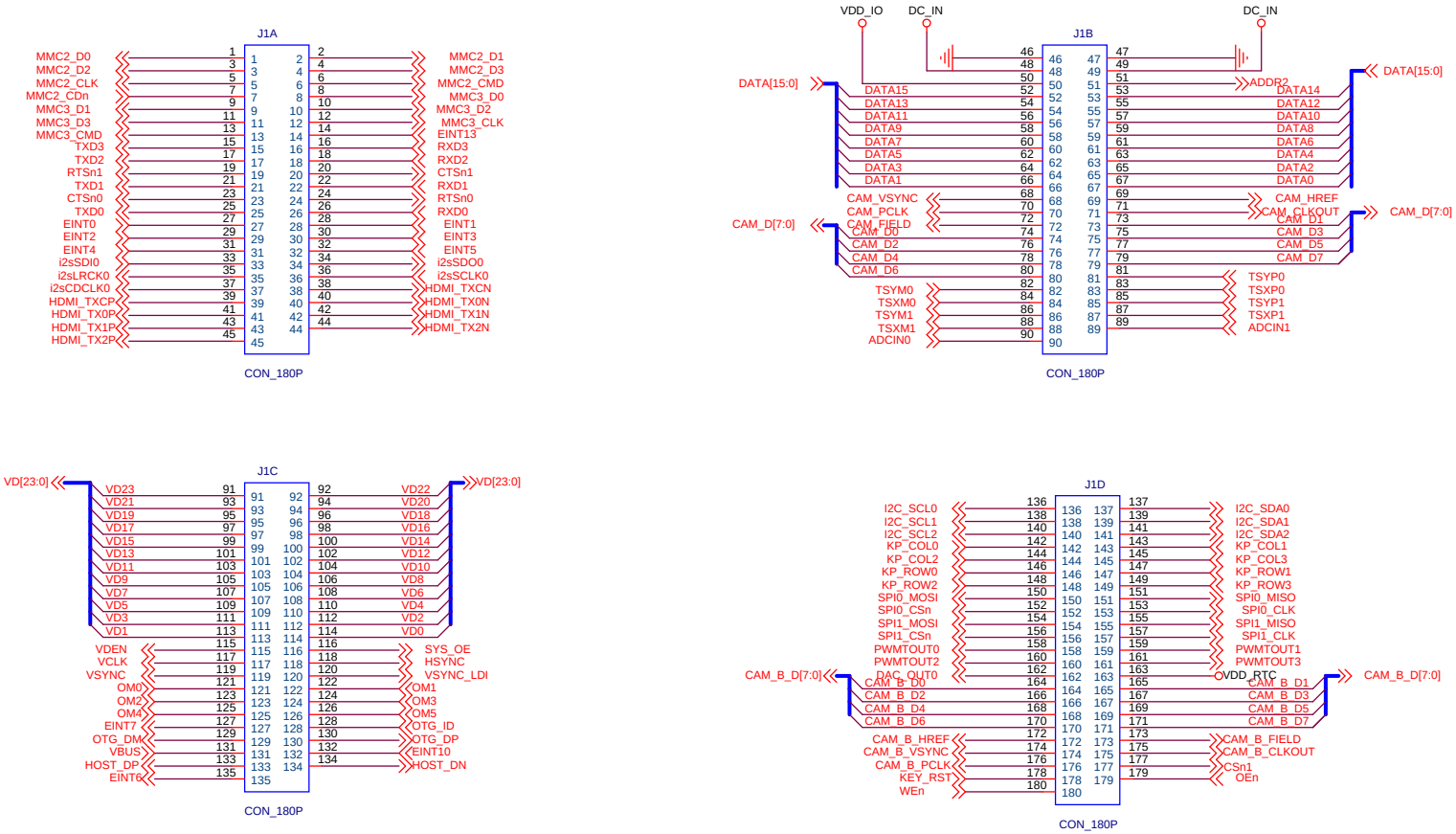

www.xboot.org

Title **S5PV210 CPU Board**

Size	Document Number	Rev
A3	CONNECTOR	V1

Date: Saturday, April 07, 2012 Sheet 8 of 9

ARM 1.2V-1.3V OFF in SLEEP mode

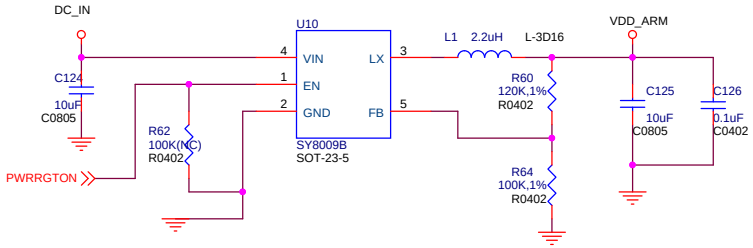

I/O 3.3V

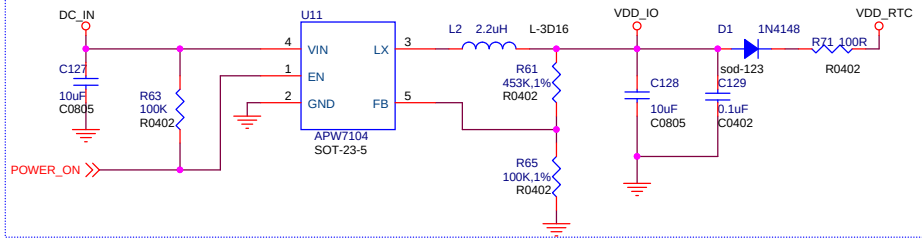

INT 1.1V OFF in SLEEP mode

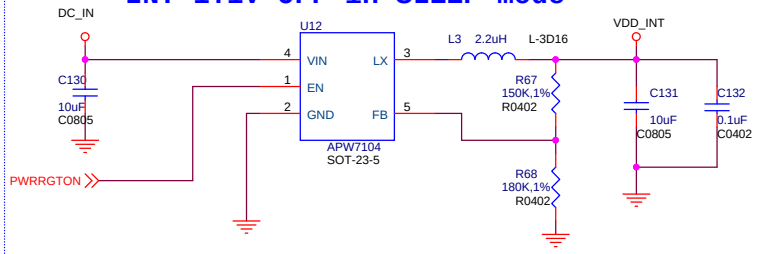

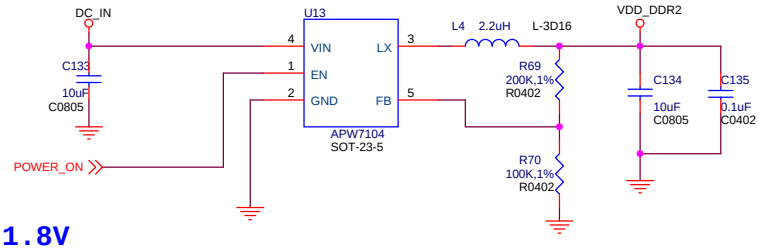

DDR2 1.8V

1.1V OFF in SLEEP mode

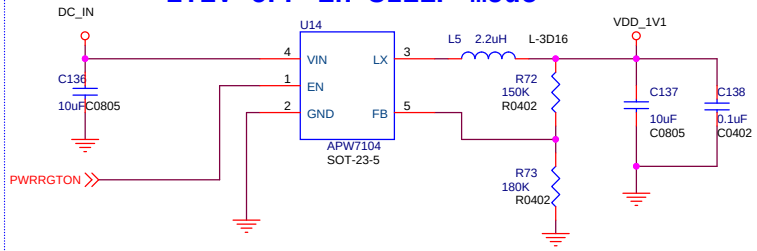

VDD Alive Power 1.2V

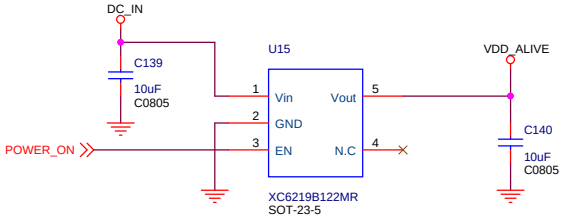

3.3V OFF in SLEEP mode

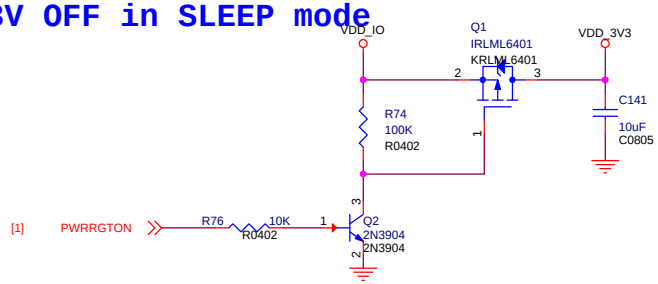

MIPI 1.8V OFF in SLEEP mode

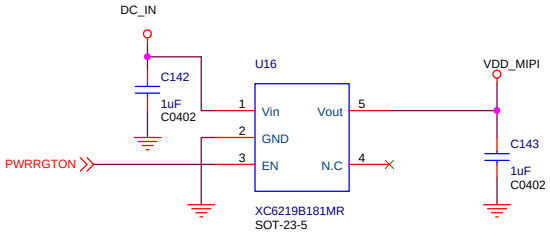

www.xboot.org

Title		
S5PV210 CPU Board		
Size A3	Document Number POWER	Rev V1
Date: Saturday, April 07, 2012	Sheet 9 of 9	