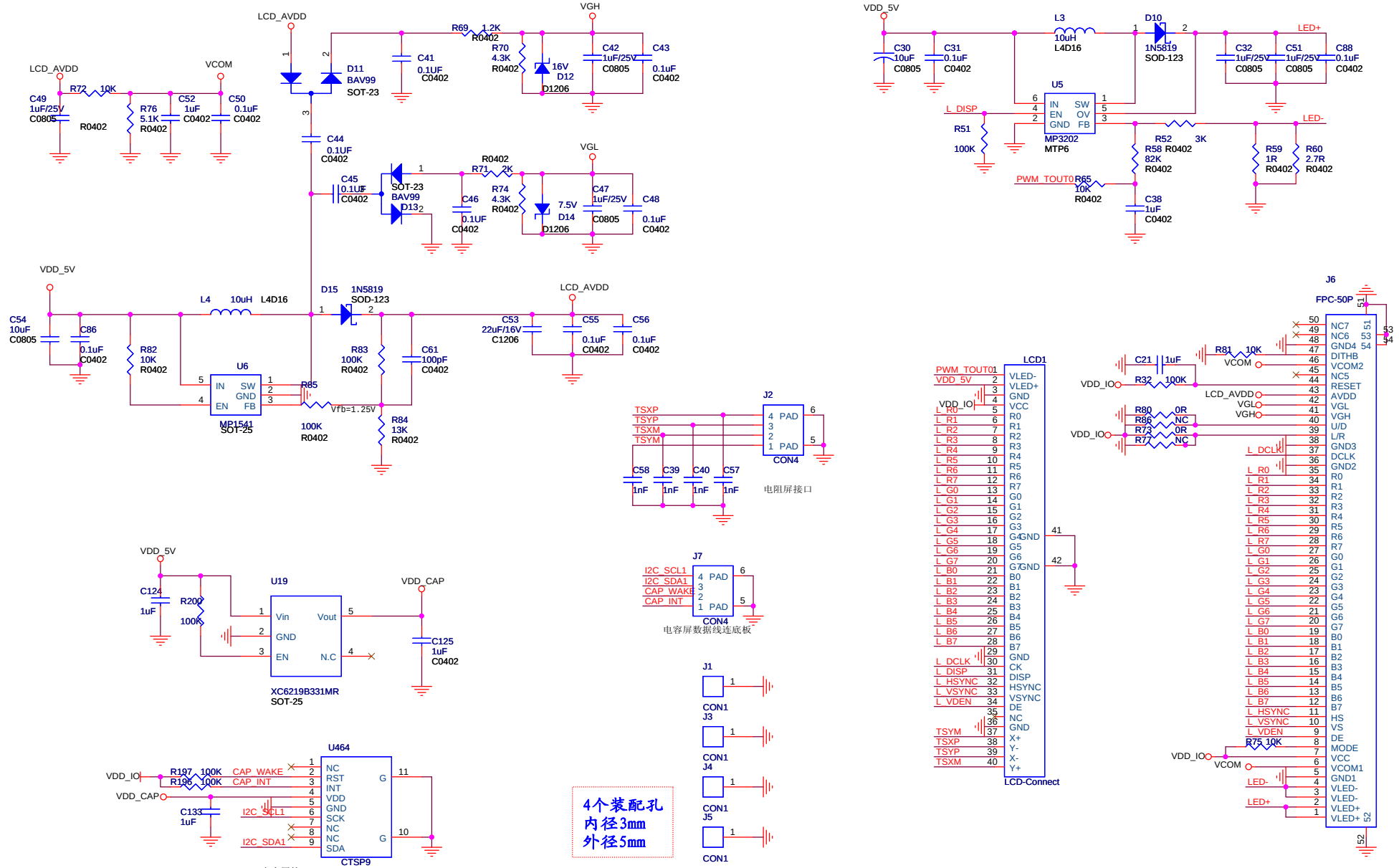

Title	<Title>
Size	Custom
Document Number	<Doc>
Rev	<RevCo
Date:	Sunday, June 26, 2011
Sheet	1 of 1