PRE-SPECIFICATION FOR VS070CXN16V0

Project No.	**VS070CXN16V0**
Customer	
Module No.	
Product type	Standard LCD Module 1024RGB(H) x 600(V)Pixels 7.0”TFT LCD
Signature by customer:	

Prepared	Checked	Approved

CONTENTS

		Page No.
1.	DOCUMENT REVISION HISTORY	3
2.	GENERAL DESCRIPTION	4
3.	MECHANICAL SPECIFICATIONS	4
4.	INTERFACE SIGNALS	6
5.	ABSOLUTE MAXIMUM RATINGS	6
6.	ELECTRICAL SPECIFICATIONS	6
7.	OPTICAL CHARACTERISTICS	7
8.	DATE INPUT CHARACTERISTICS	10
9.	ENVIRONMENTAL/RELIABILITY TEST	13
10.	INSPECTION CRITERIA	13
11.	SUGGESTIONS FOR USING LCD MODULES	17
12.	PRODUCT ID RULE	18
13.	PACKING(REFERENCE ONLY)	19

1.Document revision history:

DOCUMENT REVISION	DATE	DESCRIPTION	PREPARED BY	APPROVED BY
V00	2013.11.11	First Release.	Tiger	

2. General Description

- 7.0”(diagonal), 1024 (RGB)x 600pixels, 16M colors, Transmissive, TFT LCD module.
- Viewing Direction: 6 O’clock.
- 24–bit RGB interface
- Logic voltage: 3.0-3.6V (typ.).

3. Mechanical Specifications

The mechanical detail is shown in Fig. 1 and summarized in Table 1 below.

Table 1

Parameter		Specifications	Unit
Outline dimensions		165(W) x100(H) x2.8(D)	mm
	TP view area		mm
	TP active area		
	active area	154.21(W) x 85.92(H)	
	Display format	1024 (RGB)x600	pixels
	Color configuration	RGB stripes	-
Weight		TBD	grams

Figure 1: Outline Drawing (Unit: mm)

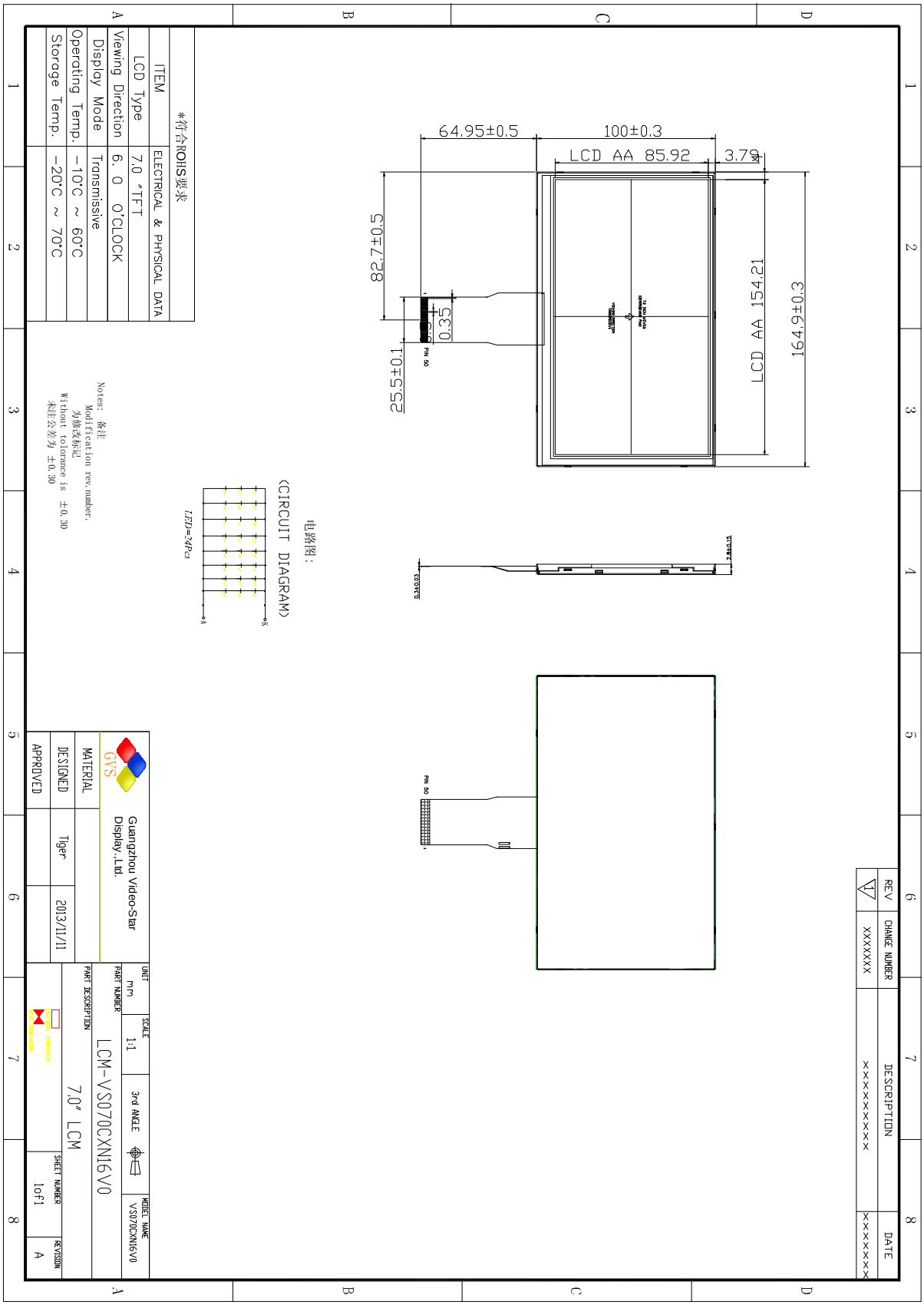

4. Interface signals

FPC Connector is used for the module electronics interface. The recommended model is FH12A-50S-0.5SH manufactured by Hirose.

Table 2: Pin assignment

Pin No.	Symbol	I/O	Function	Remark
1	V_{LED+}	P	Power for LED backlight (Anode)	
2	V_{LED+}	P	Power for LED backlight (Anode)	
3	V_{LED-}	P	Power for LED backlight (Cathode)	
4	V_{LED-}	P	Power for LED backlight (Cathode)	
5	GND	P	Power ground	
6	V_{COM}	I	Common voltage	
7	DV_{DD}	P	Power for Digital Circuit	
8	MODE	I	DE/SYNC mode select	Note 1
9	DE	I	Data Input Enable	
10	VS	I	Vertical Sync Input	
11	HS	I	Horizontal Sync Input	
12	B7	I	Blue data(MSB)	
13	B6	I	Blue data	
14	B5	I	Blue data	
15	B4	I	Blue data	
16	B3	I	Blue data	
17	B2	I	Blue data	
18	B1	I	Blue data	Note 2
19	B0	I	Blue data(LSB)	Note 2
20	G7	I	Green data(MSB)	
21	G6	I	Green data	
22	G5	I	Green data	
23	G4	I	Green data	
24	G3	I	Green data	
25	G2	I	Green data	

26	G1	I	Green data	Note 2
27	G0	I	Green data(LSB)	Note 2
28	R7	I	Red data(MSB)	
29	R6	I	Red data	
30	R5	I	Red data	
31	R4	I	Red data	
32	R3	I	Red data	
33	R2	I	Red data	
34	R1	I	Red data	Note 2
35	R0	I	Red data(LSB)	Note 2
36	GND	P	Power Ground	
37	DCLK	I	Sample clock	Note 3
38	GND	P	Power Ground	
39	L/R	I	Left / right selection	Note 4,5
40	U/D	I	Up/down selection	Note 4,5
41	V_{GH}	P	Gate ON Voltage	
42	V_{GL}	P	Gate OFF Voltage	
43	AV_{DD}	P	Power for Analog Circuit	
44	RESET	I	Global reset pin.	Note 6
45	NC	-	No connection	
46	V_{COM}	I	Common Voltage	
47	DITHB	I	Dithering function	Note 7
48	GND	P	Power Ground	
49	NC	-	No connection	
50	NC	-	No connection	

I: input, O: output, P: Power

Note 1: DE/SYNC mode select. Normally pull high.
When select DE mode, MODE=”1”, VS and HS must pull high.
When select SYNC mode, MODE= ”0”, DE must be grounded.
Note 2: When input 18 bits RGB data, the two low bits of R,G and B data must be

grounded.

Note 3: Data shall be latched at the falling edge of DCLK.

Note 4: Selection of scanning mode

Setting of scan control input		Scanning direction
U/D	L/R	
GND	DV_{DD}	Up to down, left to right
DV_{DD}	GND	Down to up, right to left
GND	GND	Up to down, right to left
DV_{DD}	DV_{DD}	Down to up, left to right

Note 5: Definition of scanning direction.
Refer to the figure as below:

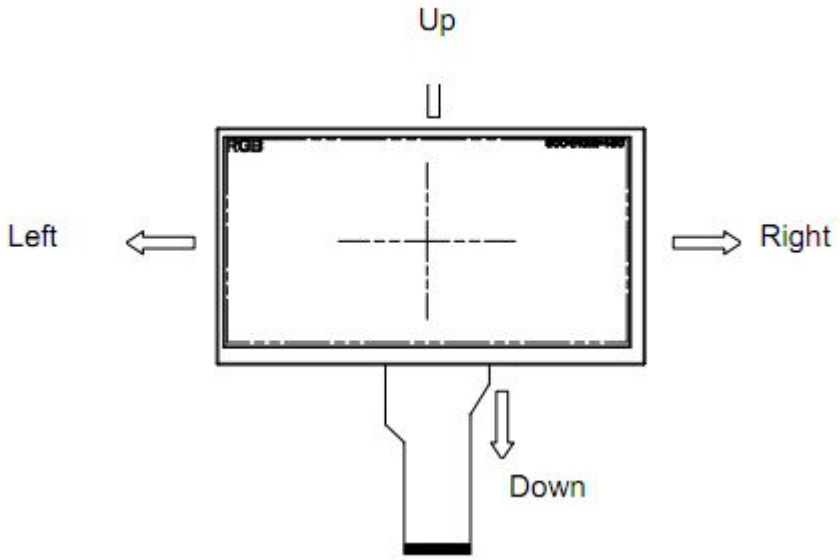

Note 6: Global reset pin. Active low to enter reset state. Suggest to connect with an RC reset circuit for stability. Normally pull high.

Note 7: Dithering function enable control, normally pull high.
When DITHB=”1”,Disable internal dithering function,
When DITHB=”0”,Enable internal dithering function,

5. Absolute Maximum Ratings

5.1 Electrical Maximum Ratings – for IC Only

Table 3: Electrical Maximum Ratings – for IC

Parameter	Symbol	Min.	Max.	Unit	Note
Power supply voltage (VDD)	VCC	-0.3	+3.6	V	1

Note:

1. VCC, GND must be maintained.
2. The modules may be destroyed if they are used beyond the absolute maximum ratings.

5.2. Power Sequence

a. Power on:

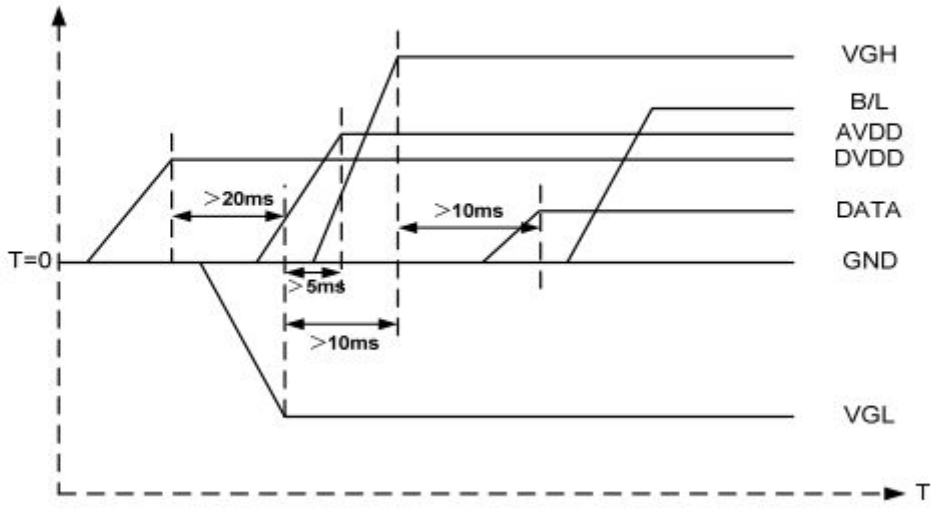

DV_{DD}→VGL→AVDD→VGH→Data→B/L

b. Power off:

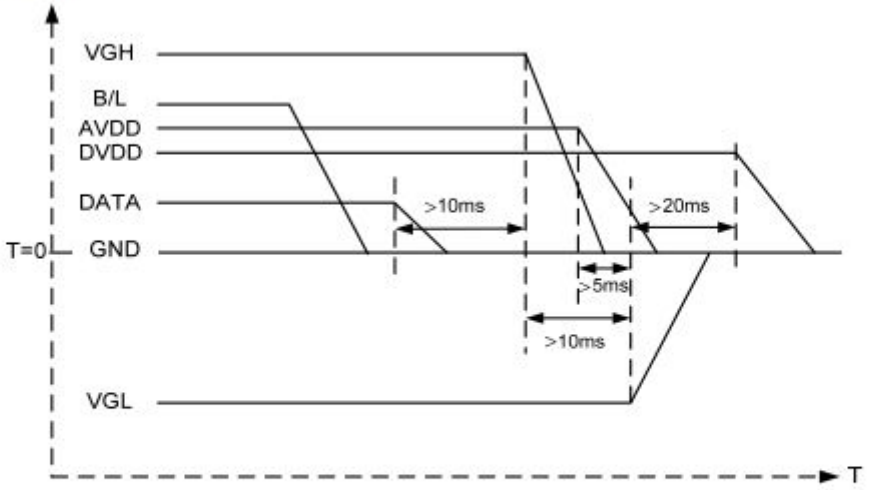

B/L→Data→VGH→AVDD→VGL→DV_{DD}

Note: Data include R0~R7, B0~B7, GO~G7, U/D, L/R, DCLK, HS,VS,DE.

6. Electrical Specifications

6.1 Typical Operation Conditions (At Ta = 25 °C,)

Table 4

ITEM	SYMBOL	MIN	TYP	MAX	UNIT	NOTE
Digital Power Supply Voltage For	DVDD	3	3.3	3.6	V	-
Analog Power Supply Voltage	AVDD	9.4	9.6	9.8	V	-
Gate On Power Supply Voltage	VGH	17	18	19	V	-
Gate Off Power Supply Voltage	VGL	-6.6	-6	-5.4	V	-
Common Power Supply Voltage	VCOM	TBD	TBD	TBD	V	Note1
Logic Input Voltage	VIH	0.7*DVD	-	DVDD	V	-
	VIL	GND	-	0.3*DVDD	V	

【Note1】Please adjust VCOM to make the flicker level be minimum.

6.2 Backlight Driving Conditions

Table 5

Parameter	Symbol	Min.	Typ.	Max.	Unit	Note
Supply voltage of white LED backlight	VL	9.3	9.9	10.5	V	Note 1
Current for LED backlight	IL	155	160	170	mA	
Uniformity	△	75	80	-	%	
Luminance (on the module surface,BM-7)	LV	300	350	-	cd/m^2	
LED life time	-	20,000	-	-	Hr	Note 2

Note 1: The LED Supply Voltage is defined by the number of LED at Ta=25℃ and IL =160mA.

Note 2: The "LED life time" is defined as the module brightness decrease to 50% original brightness at Ta=25℃ and IL =160mA. The LED lifetime could be decreased if operating IL is lager than 160mA.

7. OPTICAL CHARACTERISTICS

Table 6: Optical specifications

Items		Symbol	Condition	Specifications			Unit	Note
				Min.	Typ.	Max.		
Contrast Ratio		CR		600	800	-	-	
Response Time		T_R+T_F		-	25	40	ms	
Chromaticity (CIE1931)	White	X_W		0.237	0.287	0.337	-	
		Y_W		0.265	0.315	0.365	-	
Viewing angle	Hor.	ϕ1(3 o'clock)	Center CR≥10	70	80	-	deg.	
		ϕ2(9 o'clock)		70	80	-		
	Ver.	θ2(12 o'clock)		50	60	-		
		θ1(6 o'clock)		60	70	-		

Note 1: Definition of Contrast Ratio (CR):

The contrast ratio can be calculated by the following expression.

Contrast Ratio (CR) = L63 / L0

L63: Luminance of gray level 63

L0: Luminance of gray level 0

CR = CR (10)

CR (X) is corresponding to the Contrast Ratio of the point X at Figure in Note 5.

Note 2: Definition of Response Time (TR, TF):

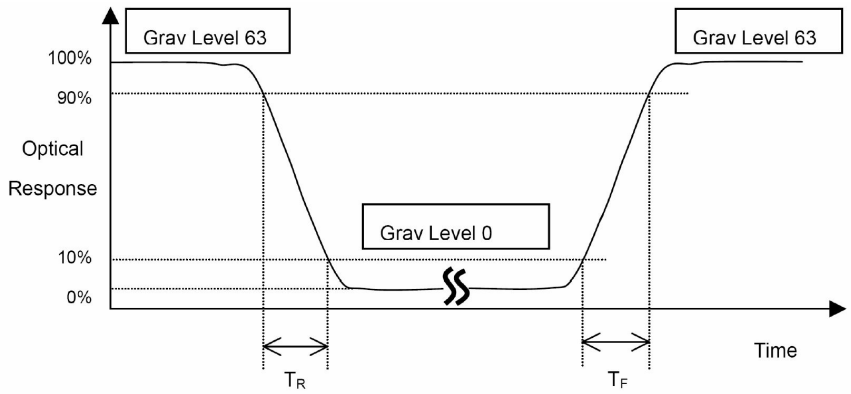

Figure 3

Note 3: Viewing Angle

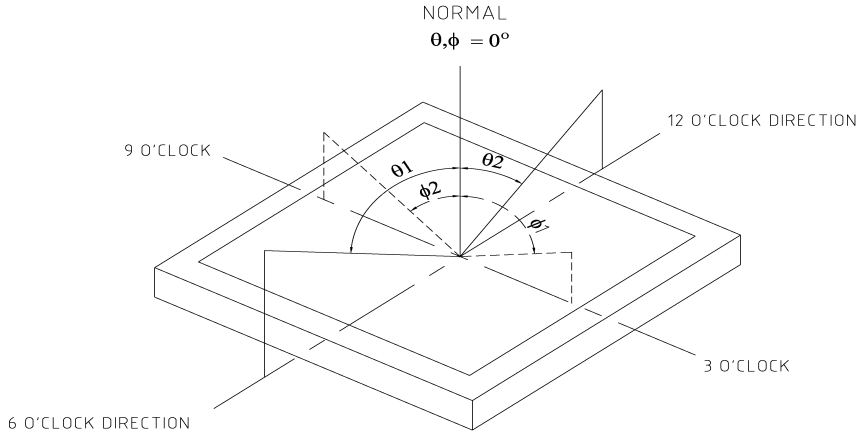

Figure 4

The above "Viewing Angle" is the measuring position with Largest Contrast Ratio; not for good image quality. View Direction for good image quality is 6 O'clock. Module maker can increase the "Viewing Angle" by applying Wide View Film.

Note 4: Measurement Set-Up:

The LCD module should be stabilized at a given temperature for 20 minutes to avoid abrupt temperature change during measuring. In order to stabilize the luminance, the measurement should be executed after lighting Backlight for 20 minutes in a windless room.

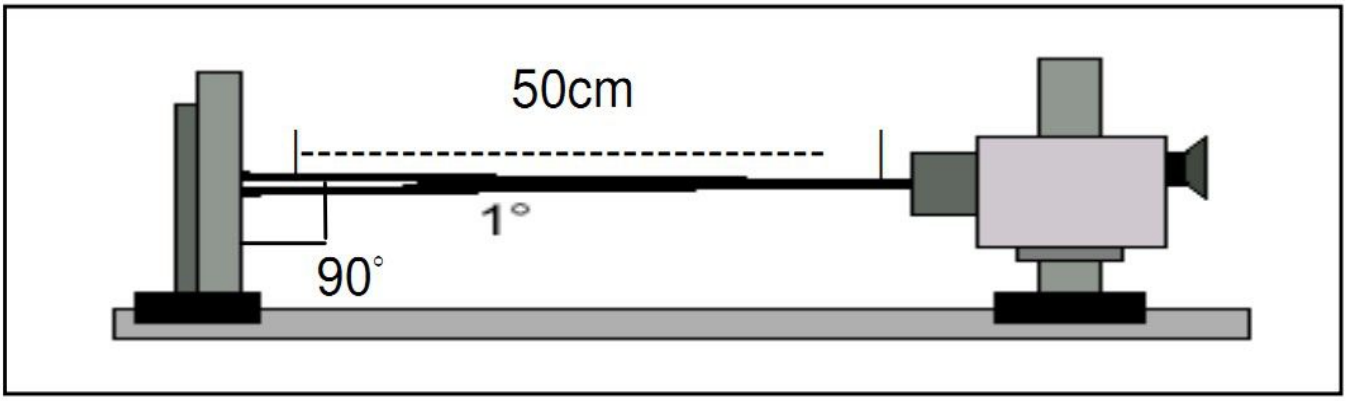

8. Data input Characteristics8.

8.1 Timing Characteristics of Input Signals

ITEM		SYMBOL	MIN.	TYP.	MAX.	UNIT	Note
DE MODE	Dot Clock	1/tCLK	45	51.2	57	MHz	
	DCLK pulse duty	Tcwh	40	50	60	%	
	Horizontal total Time	tH	1324	1344	1364	tCLK	
	Horizontal effective Time	tHA		1024		tCLK	
	Horizontal Blank Time	tHB	300	320	340	tCLK	
	Vertical total Time	tV	625	635	645	tH	
	Vertical effective Time	tVA		600		tH	
	Vertical Blank Time	tVB	25	35	45	tH	
SYNC MODE	Horizontal total Time	TH	1324	1344	1364	tCLK	
	Horizontal Pulse Width	Thpw		20	-	tCLK	thb + thpw =160DCLK is fixed
	Horizontal Back Porch	Thb		140	-	tCLK	
	Horizontal Front Porch	Thfp	140	160	180	tCLK	
	Horizontal effective Time	THA		1024		tCLK	
	Vertical total Time	TV	625	635	645	tH	
	Vertical Pulse Width	Tvpw		3	-	th	tvpw + tvb =23th is fixed
	Vertical Back Porch	Tvb	-	20	-	th	
	Vertical Front Porch	Tvfp	2	12	22	th	
	Vertical Valid	Tvd		600		th	

8.2 Input Clock and Data Timing Diagram

Parameter	Symbol	Spec.			Unit	Condition
		Min.	Typ.	Max.		
DVDD power on slew rate	TPOR	-	-	20	ms	From 0V to 90% DVDD
RSTB pulse width	TRst	50	-	-	us	DCLK=65MHz
DCLK cycle time	Tcph	14	-	-	ns	
DCLK pulse duty	Tcwh	40	50	60	%	
VSD setup time	Tvst	5	-	-	ns	
VSD hold time	Tvhd	5	-	-	ns	
HSD setup time	Thst	5	-	-	ns	
HSD hold time	Thhd	5	-	-	ns	
Data setup time	Tdsu	5	-	-	ns	D0[7:0, D1[7:0], D2[7:0 to DCLK]]
Data hold time	Tdhd	5	-	-	ns	D0[7:0, D1[7:0], D2[7:0 to DCLK]]
DEN setup time	Tesu	5	-	-	ns	
DEN hold time	Tehd	5	-	-	ns	

8.3 Data Input Format

Parallel RGB Interface

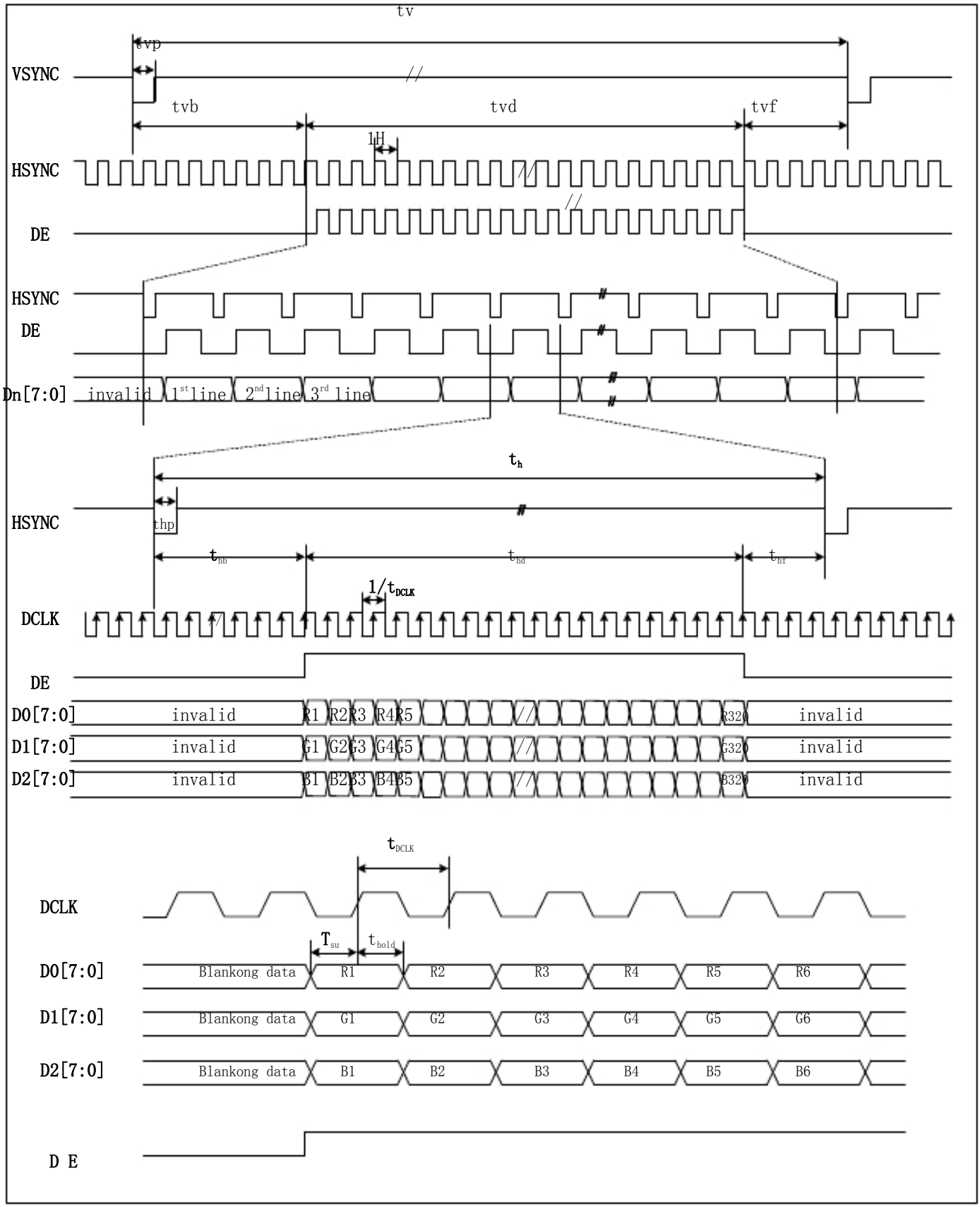

9. Environmental / Reliability Test

Table 8

Test Item	Sample Type	Test Condition	Test result determinant gist
High temperature storage	Normal temperature	60±3℃;96H	the inspection of appearance and function character.
	Wide temperature	70±3℃;96H	
Low temperature storage	Normal temperature	-10±3℃;96H	
	Wide temperature	-20±3℃;96H	
High temperature /humidity storage	Normal temperature	50℃±3℃,85%±3%RH;96H	
	Wide temperature	60℃±3℃,85%±3%RH;96H	
High temperature operation	Normal temperature	60±3℃;96H	No objection of the function character; no fatal objection of the appearance.
	Wide temperature	70±3℃;96H	
Low temperature operation	Normal temperature	-10±3℃;96H	
	Wide temperature	-20±3℃;96H	
High temperature /humidity operation	Normal temperature	40℃±3℃,85%±3%RH;96H	
	Wide temperature	50℃±3℃,85%±3%RH;96H	
Temperature Shock	Normal temperature	-10±3℃,30min→60±3℃,30 min;10cycle	inspect the objections appearance、function & the whole structure
	Wide temperature	-20±3℃,30min 70±3,30min;10cycle	The inspection of appearance、function & the whole structure

10. Inspection Criteria

Defects are classified as major defects and minor defects according to the degree of defectiveness defined herein.

<table>
<tr><th>No</th><th>Item</th><th>Criterion for defects</th><th>Defect type</th></tr>
<tr><td>1</td><td>Black/white spot def（in displaying）</td><td>
black/white spot definition
$\Phi = \frac{(x+y)}{2}$
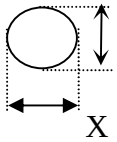

1. black/white spot defect (I)
<table>
<tr><th>size（mm） \ area</th><th colspan="3">Acceptable number</th></tr>
<tr><th></th><th>A</th><th>B</th><th>C</th></tr>
<tr><td>Φ≤0.1</td><td colspan="2">ignore</td><td rowspan="4">ignore</td></tr>
<tr><td>0.10＜Φ≤0.15</td><td colspan="2">3</td></tr>
<tr><td>0.15＜Φ≤0.25</td><td colspan="2">2</td></tr>
<tr><td>Φ＞0.25</td><td colspan="2">0</td></tr>
</table>
2. black/white spot defect (II)
<table>
<tr><th>size（mm） \ area</th><th colspan="3">Acceptable number</th></tr>
<tr><th></th><th>A</th><th>B</th><th>C</th></tr>
<tr><td>Φ≤0.3</td><td colspan="2">ignore</td><td rowspan="4">ignore</td></tr>
<tr><td>0.30＜Φ≤0.50</td><td colspan="2">5 (spac ebetween is 20mm)</td></tr>
<tr><td>0.50＜Φ≤1.00</td><td colspan="2">3(spac ebetween is 50mm)</td></tr>
<tr><td>1.00＜Φ</td><td colspan="2">0</td></tr>
</table>
</td><td>Minor</td></tr>
<tr><td>2</td><td>Black/white Line defect displaying）</td><td>
1. black/white line defect (I)
<table>
<tr><th colspan="2">size（mm）</th><th colspan="3">Acceptable number</th></tr>
<tr><th rowspan="2">L(length)</th><th rowspan="2">W(width)</th><th colspan="3">area</th></tr>
<tr><th>A</th><th>B</th><th>C</th></tr>
<tr><td>10＜L</td><td>0.03＜W≤0.04</td><td colspan="2">5</td><td rowspan="4">ignore</td></tr>
<tr><td>5.0＜L≤10</td><td>0.04＜W≤0.06</td><td colspan="2">3</td></tr>
<tr><td>1.0＜L≤5.0</td><td>0.06＜W≤0.07</td><td colspan="2">2</td></tr>
<tr><td>L≤1.0</td><td>0.07＜</td><td colspan="2">1</td></tr>
</table>
</td><td>Minor</td></tr>
</table>

	W≤0.09			

2. black/white line defect(II)

size(mm)		Acceptable number		
L(length)	W(width)	area		
		A	B	C
20＜L	0.05＜W≤0.07	5		ignore
10＜L≤20	0.07＜W≤0.09	3		
5.0＜L≤10	0.09＜W≤0.10	2		
L≤5.0	0.10＜W≤0.15	1		

<table>
<tr><td rowspan="2">3</td><td rowspan="2">Blemish & foreign matters</td><td>
1. dot (LCD)
<table>
<tr><td rowspan="3">size(mm)</td><td colspan="3">Acceptable number</td></tr>
<tr><td colspan="3">area</td></tr>
<tr><td>A</td><td>B</td><td>C</td></tr>
<tr><td>Φ≤0.1</td><td colspan="2">ignore</td><td rowspan="4">ignore</td></tr>
<tr><td>0.10＜Φ≤0.15</td><td colspan="2">2</td></tr>
<tr><td>0.15＜Φ≤0.25</td><td colspan="2">1</td></tr>
<tr><td>0.25＜Φ</td><td colspan="2">0</td></tr>
</table>
2. blemish（on touch panle or between touch panel ane LCD）
<table>
<tr><td rowspan="3">size(mm)</td><td colspan="3">Acceptable number</td></tr>
<tr><td colspan="3">AREA</td></tr>
<tr><td>A</td><td>B</td><td>C</td></tr>
<tr><td>Φ≤0.1</td><td colspan="2">ignore</td><td rowspan="3">ignore</td></tr>
<tr><td>0.10＜Φ≤0.15</td><td colspan="2">1</td></tr>
<tr><td>0.15＜Φ</td><td colspan="2">0</td></tr>
</table>
3.line（LCD/touch panle）
<table>
<tr><td colspan="2">size(mm)</td><td colspan="3">Acceptable number</td></tr>
<tr><td rowspan="2">L(length)</td><td rowspan="2">W(width)</td><td colspan="3">area</td></tr>
<tr><td>A</td><td>B</td><td>C</td></tr>
<tr><td>Ignore</td><td>W≤0.02</td><td colspan="2">5</td><td rowspan="4">ignore</td></tr>
<tr><td>L≤3.0</td><td>0.02＜W≤0.03</td><td colspan="2">3</td></tr>
<tr><td>L≤2.0</td><td>0.03＜W≤0.05</td><td colspan="2">2</td></tr>
<tr><td>---</td><td>W＞0.05</td><td colspan="2">Treat with dot</td></tr>
</table>
</td><td>Minor</td></tr>
<tr><td>4</td><td>Stain on LCD panel</td><td>Stain which cannot be removed even when wiped lightly with a soft cloth or similar cleaning too are</td><td>Minor</td></tr>
</table>

	surface	rejectable	
5	Rust in bezel	Rust which is visible in the bezel is rejectable	Minor
6	Defect of land surface contact	Evident crevices which is visble are rejectable	Minor
7	Parts mounting	(1) failure to mount parts (2) parts not in the specification are mounted (3) polarith, for example,is reversed	Major Major Major
8	Parts alignment	(1) LSI,IC lead width is more than 50% beyond pad outline (2) Chip component is off center and more than 50% of the leads is off the pad outline	Minor Minor
9	Conductive foreign matter	(1) on open space(gnd,manual solder)solder ball is allowed up toΦ0.1mm(1EA). (2) In case of shield space is allowed up toΦ0.2mm(1EA)	Major
10	Faculty PWB correction	(1) due to PWB copper foil pattern burnout,the patter is connected,using a jumper wire for repair;2 or more places corrected per PWB (2) short circuited part is cut,and no resist coating has been performed.	Minor Minor

area definition

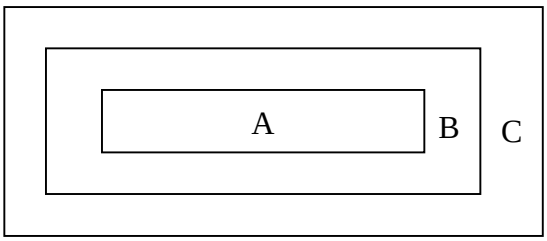

LCD inspection area

A：active area

B：visible area

C：outside of visible area（Invisible area after assembling）

Visible Defect in area c，but it cannot affect product’s quality ，it is allowed .

11. Suggestions for using LCD modules

11.1 Handling of LCM

1. The LCD screen is made of glass. Don't give excessive external shock, or drop from a high place.
2. If the LCD screen is damaged and the liquid crystal leaks out, do not lick and swallow. When the liquid is attach to your hand, skin, cloth etc, wash it off by using soap and water thoroughly and immediately.
3. Don't apply excessive force on the surface of the LCM.
4. If the surface is contaminated ,clean it with soft cloth. If the LCM is severely contaminated , use Isopropyl alcohol/Ethyl alcohol to clean. Other solvents may damage the polarizer . The following solvents is especially prohibited: water , ketone Aromatic solvents etc.
5. Exercise care to minimize corrosion of the electrode. Corrosion of the electrodes is accelerated by water droplets, moisture condensation or a current flow in a high-humidity environment.
6. Install the LCD Module by using the mounting holes. When mounting the LCD module make sure it is free of twisting, warping and distortion. In particular, do not forcibly pull or bend the I/O cable or the backlight cable.
7. Don’t disassemble the LCM.
8. To prevent destruction of the elements by static electricity, be careful to maintain an optimum work environment.
   - Be sure to ground the body when handling the LCD modules.
   - Tools required for assembling, such as soldering irons, must be properly grounded.
   - To reduce the amount of static electricity generated, do not conduct assembling and other work under dry conditions.
   - The LCD module is coated with a film to protect the display surface. Exercise care when peeling off this protective film since static electricity may be generated.
9. Do not alter, modify or change the the shape of the tab on the metal frame.
10. Do not make extra holes on the printed circuit board, modify its shape or change the positions of components to be attached.
11. Do not damage or modify the pattern writing on the printed circuit board.
12. Absolutely do not modify the zebra rubber strip (conductive rubber) or heat seal connector
13. Except for soldering the interface, do not make any alterations or modifications with a soldering iron.
14. Do not drop, bend or twist LCM.

11.2 Storage

1. Store in an ambient temperature of 5 to 45 。C, and in a relative humidity of 40% to 60%. Don't expose to sunlight or fluorescent light.
2. Storage in a clean environment, free from dust, active gas, and solvent.
3. Store in antistatic container.

12. Product ID Rule

Product Name(e.g)

VS	□□□	□	□	□	□□	□□
①	②	③	④	⑤	⑥	⑦

①(Company)		② (Size)		③LCD Company		④IC Company	
Code	**Description**	**Code**	**Description**	**Code**	**Description**	**Code**	**Description**
VS	Guangzhou Shisheng optoelectronics Co., Ltd.	035 040 043	3.5” 4.0” 4.3”	A B C D H I L M N O P R S T V W Y	AUO BOE CPT HYDIS HSD INNOLUX LGD CMI TOPSUN ORTUSTECH SHARP ARIMA LAIBAO TM IVO WINTEK TRULY	E F H I L N O R S U V	EK(FITI) FT HIMAX ILI LGD NT OTM RENESAS ST UC NV(New Vision)

⑤TP With and Without		⑥Serial number（2-4digits）		⑦REV（1-2Digits)	
Code	**Description**	**Code**	**Description**	**Code**	**Description**
T N	With TP Without TP	01	Product Serial NO.	V0 V1 V2	The new product The first Change The Second Change

13. Packing (Reference only)

13.1 Packing Method

(1)

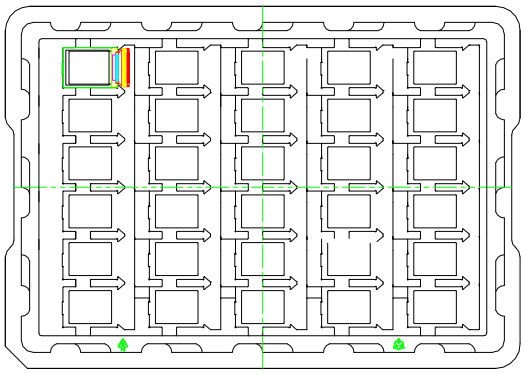

(2)

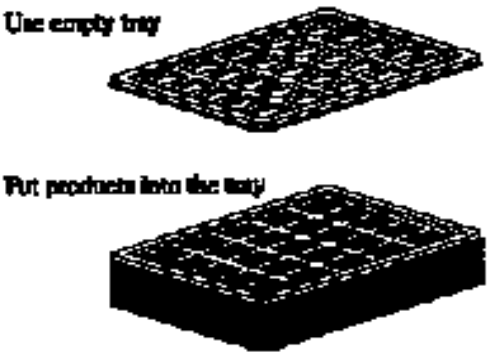

(3)

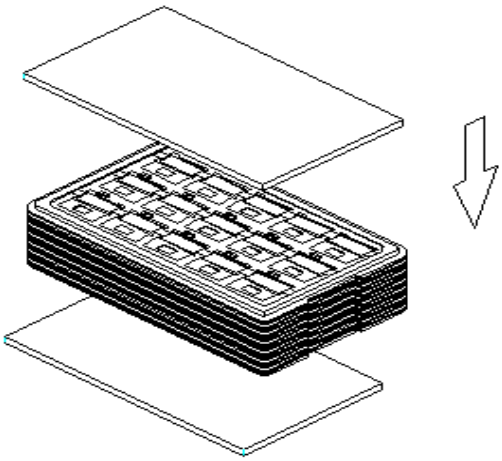

(4)

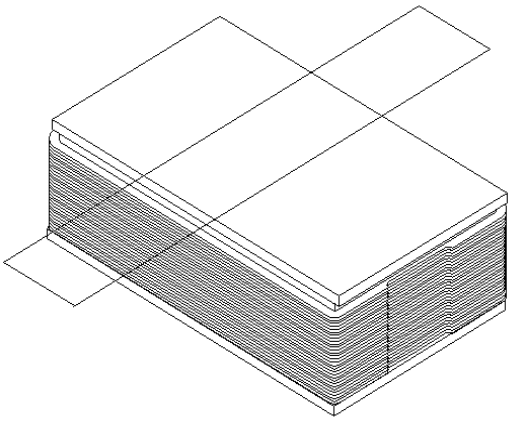

(5)

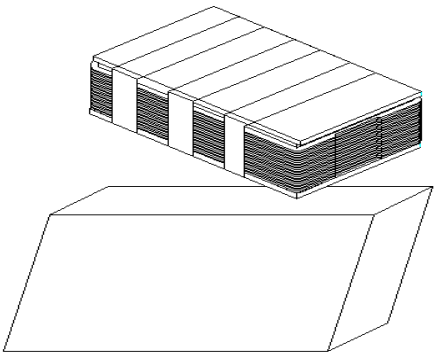

(6)

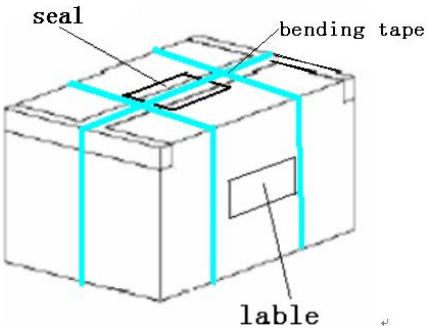

1. Put module into tray cavity:
2. Tray stacking
3. Put 1 cardboard under the tray stack and 1 cardboard above:
4. Fix the cardboard to the tray stack with adhesive tape:
5. Put the tray stack into carton.
6. Carton sealing with adhesive tape.

13.2 Box label

The box label followed by is affixed to a shipped product at the specified location on each packing box.

1) Label Size: 80 mm (L) ´ 60 mm (W)

2) Contents

- Model : VS070CXN16V0
- Q`ty : Quantity in one box
- Serial No. : Refer the description as below.
- Date : Packing Date
- FG Code : FG Code of Product