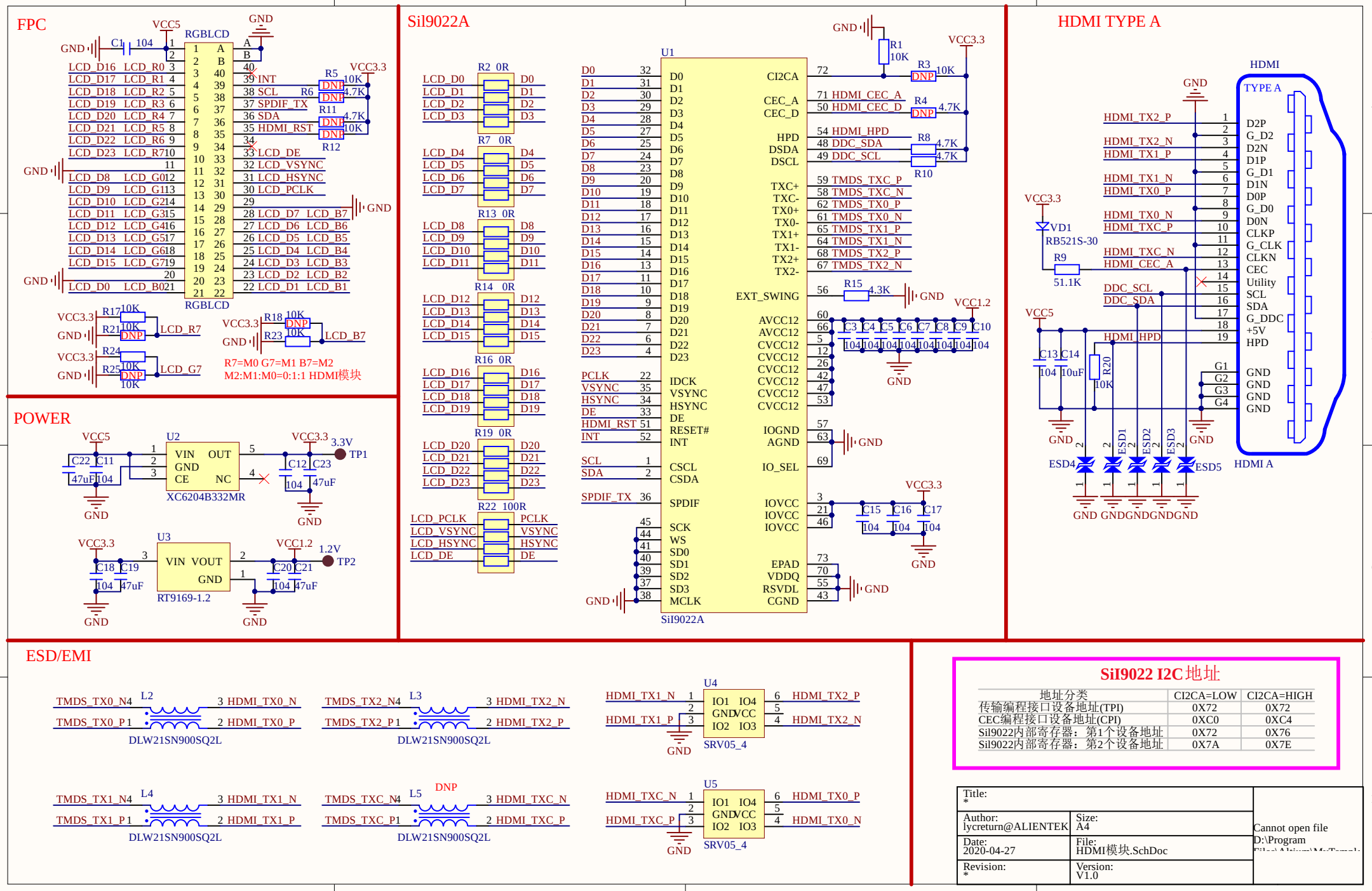
FPC
RGBLCD
LCD_D16 LCD_R0 3
LCD_D17 LCD_R1 4
LCD_D18 LCD_R2 5
LCD_D19 LCD_R3 6
LCD_D20 LCD_R4 7
LCD_D21 LCD_R5 8
LCD_D22 LCD_R6 9
LCD_D23 LCD_R710
LCD_D8 LCD_G012
LCD_D9 LCD_G113
LCD_D10 LCD_G214
LCD_D11 LCD_G315
LCD_D12 LCD_G416
LCD_D13 LCD_G517
LCD_D14 LCD_G618
LCD_D15 LCD_G719
LCD_D0 LCD_B021
39 INT
38 SCL
37 SPDIF_TX
36 SDA
35 HDMI_RST
33 LCD_DE
32 LCD_VSYNC
31 LCD_HSYNC
30 LCD_PCLK
28 LCD_D7 LCD_B7
27 LCD_D6 LCD_B6
26 LCD_D5 LCD_B5
25 LCD_D4 LCD_B4
24 LCD_D3 LCD_B3
23 LCD_D2 LCD_B2
22 LCD_D1 LCD_B1
LCD_R7
LCD_B7
LCD_G7
R7=M0 G7=M1 B7=M2
M2:M1:M0=0:1:1 HDMI模块
POWER
U2
VIN OUT
GND
CE NC
XC6204B332MR
3.3V
TP1
U3
VIN VOUT
GND
RT9169-1.2
1.2V
TP2
Sil9022A
U1
Sil9022A
HDMI_CEC_A
HDMI_CEC_D
HDMI_HPD
DDC_SDA
DDC_SCL
TMDS_TXC_P
TMDS_TXC_N
TMDS_TX0_P
TMDS_TX0_N
TMDS_TX1_P
TMDS_TX1_N
TMDS_TX2_P
TMDS_TX2_N
HDMI TYPE A
HDMI
TYPE A
HDMI A
ESD/EMI
DLW21SN900SQ2L
SRV05_4
Sil9022 I2C地址
地址分类 | CI2CA=LOW | CI2CA=HIGH
传输编程接口设备地址(TPI) | 0X72 | 0X72
CEC编程接口设备地址(CPI) | 0XC0 | 0XC4
Sil9022内部寄存器：第1个设备地址 | 0X72 | 0X76
Sil9022内部寄存器：第2个设备地址 | 0X7A | 0X7E
Title:
Author: lycreturn@ALIENTEK
Size: A4
Date: 2020-04-27
File: HDMI模块.SchDoc
Revision:
Version: V1.0
Cannot open file D:\Program